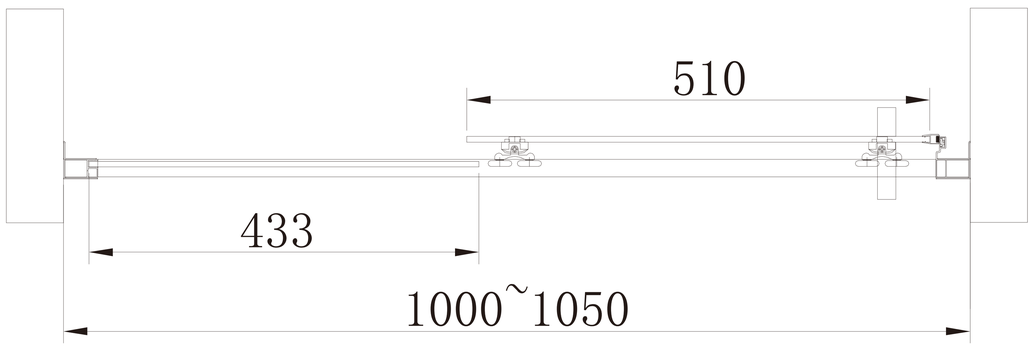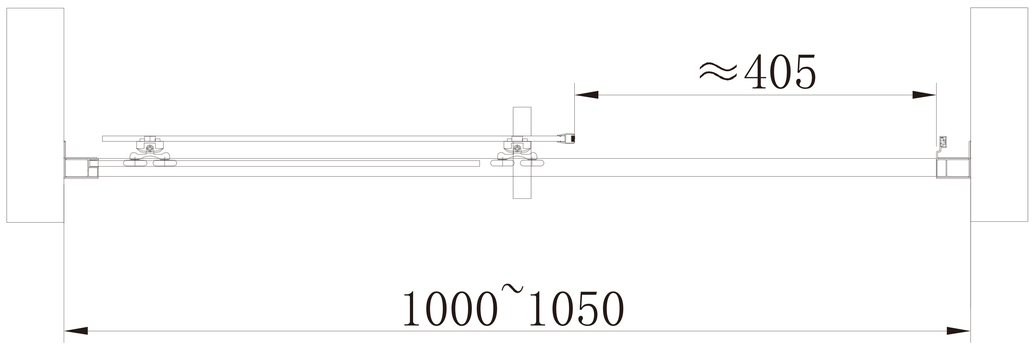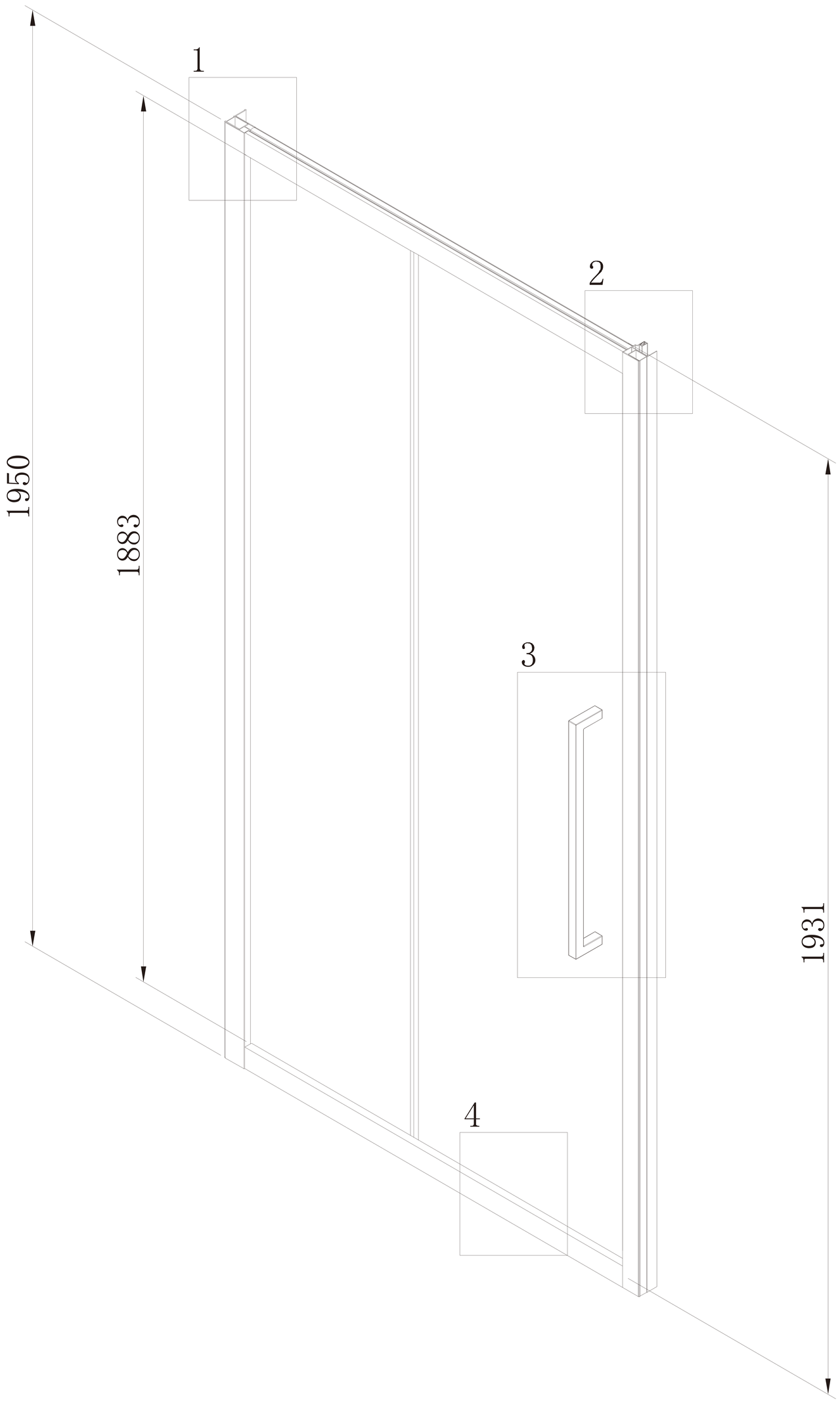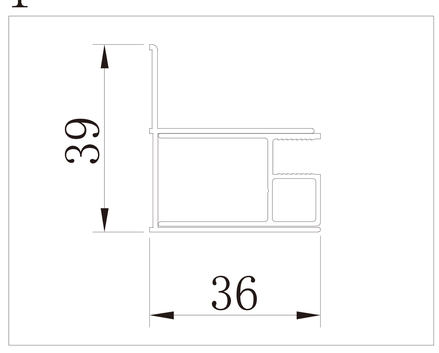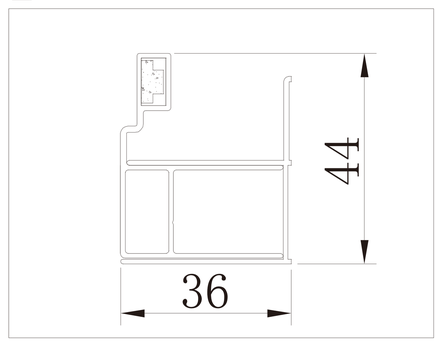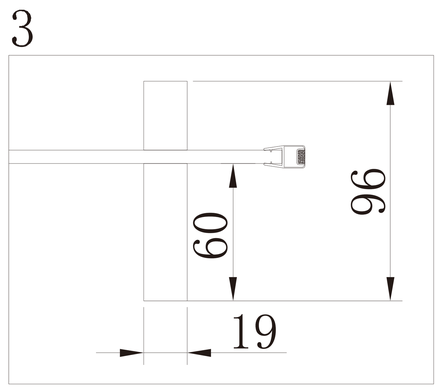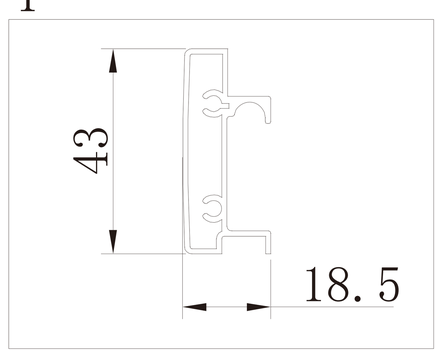TERA 100 - 105 CHROM