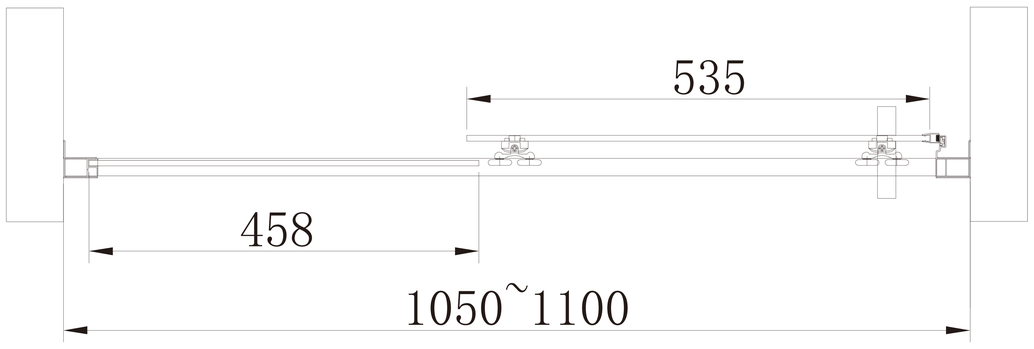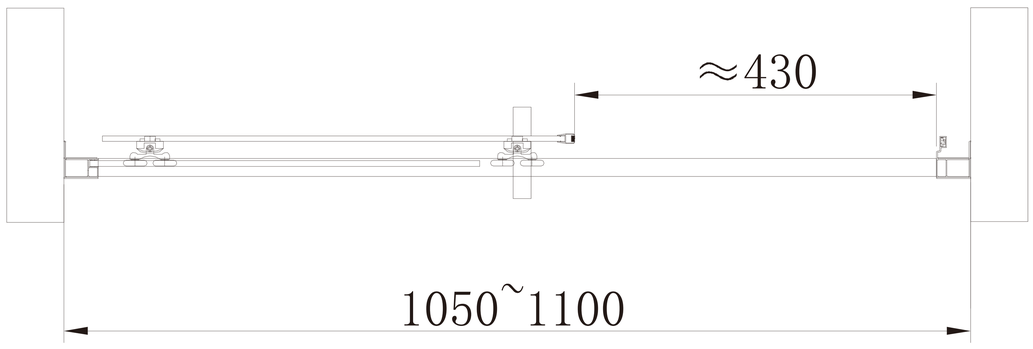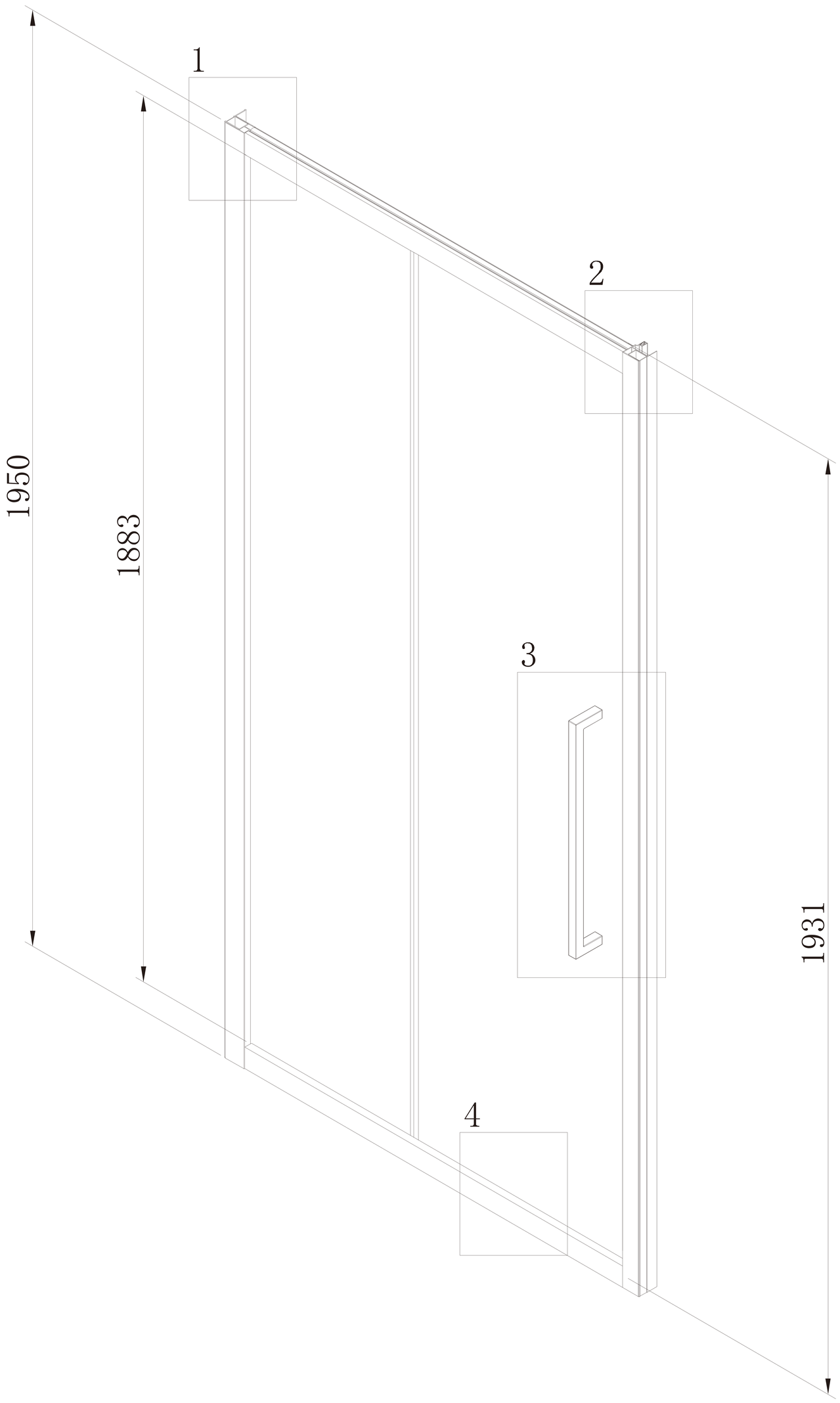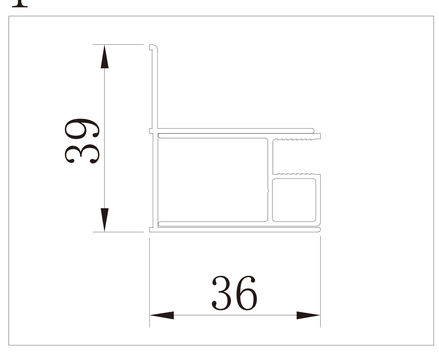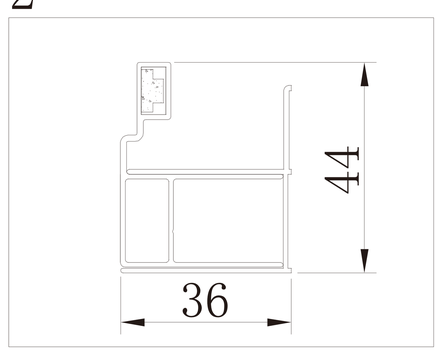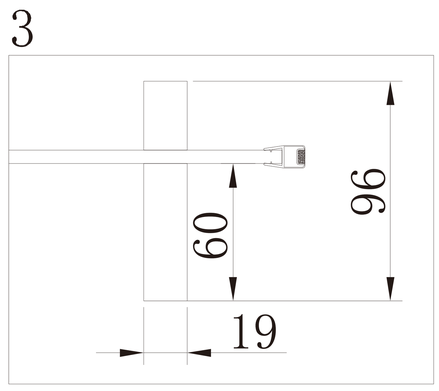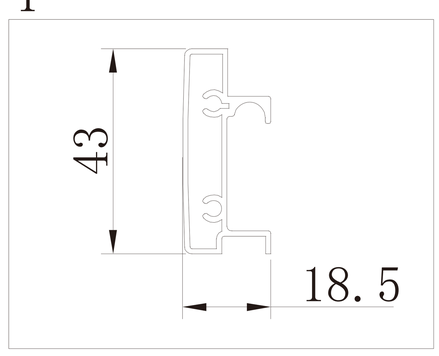TERA 105 - 110 CHROM